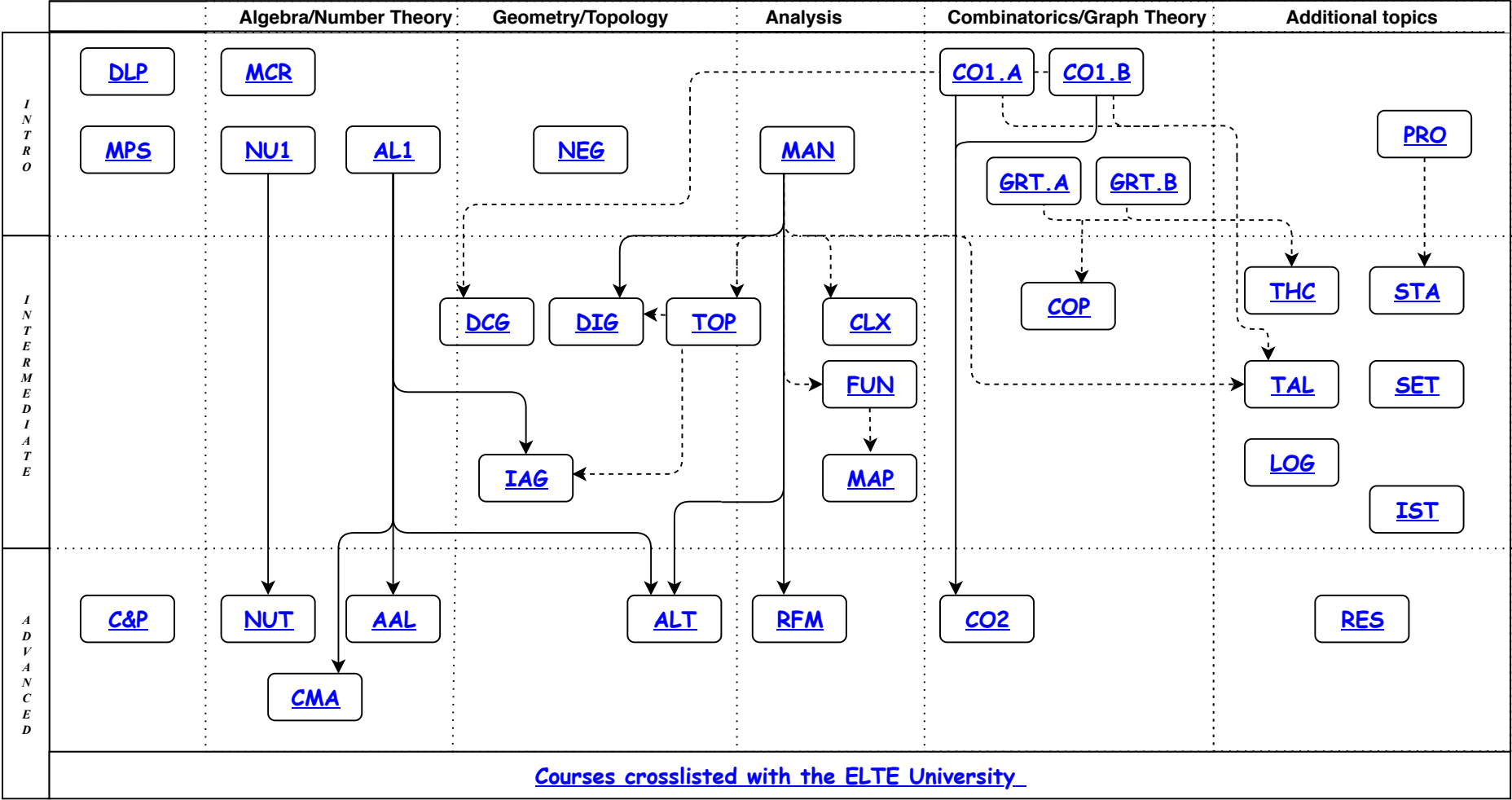
Algebra/Number Theory
Geometry/Topology
Analysis
Combinatorics/Graph Theory
Additional topics
INTRO
INTERMEDIATE
ADVANCED
DLP
MCR
CO1.A
CO1.B
MPS
NU1
AL1
NEG
MAN
PRO
GRT.A
GRT.B
THC
STA
COP
DCG
DIG
TOP
CLX
FUN
TAL
SET
IAG
MAP
LOG
IST
C&P
NUT
AAL
ALT
RFM
CO2
RES
CMA
Courses crosslisted with the ELTE University